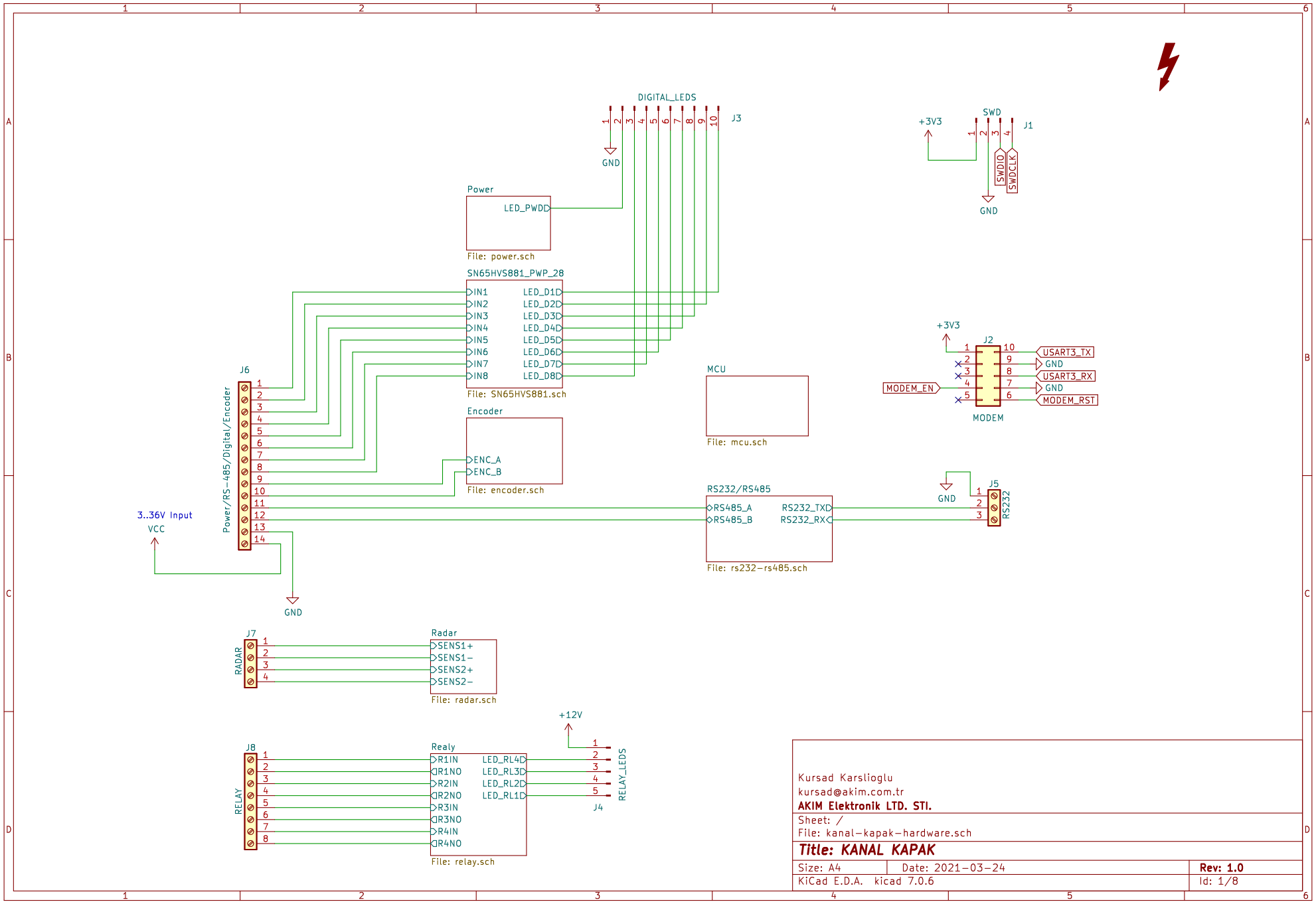


Kursad Karslioglu
kursad@akim.com.tr
**AKIM Elektronik LTD. STI.**

Sheet: /
File: kanal-kapak-hardware.sch

**Title: KANAL KAPAK**

| | | |
|---|---|---|
| Size: A4 | Date: 2021-03-24 | **Rev: 1.0** |
| KiCad E.D.A. kicad 7.0.6 | | Id: 1/8 |

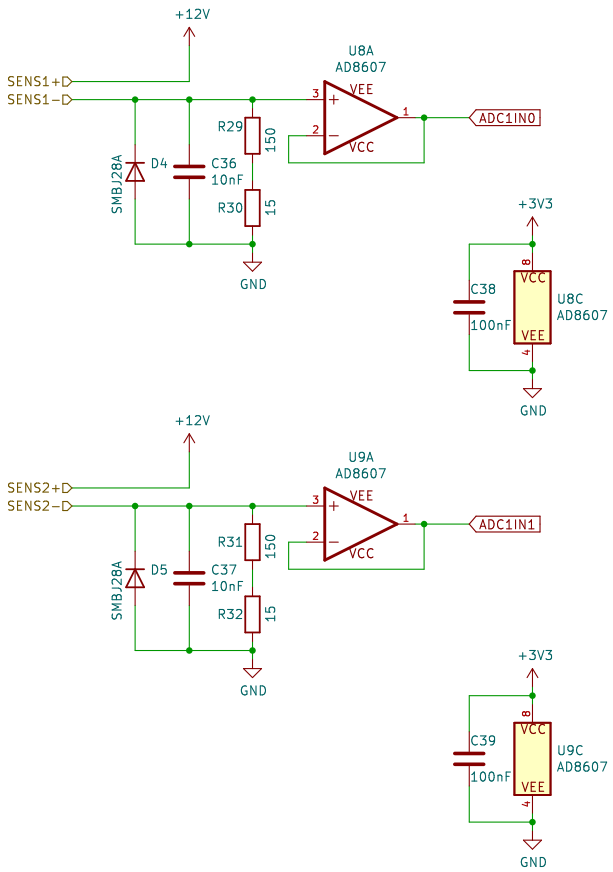


Sheet: /Radar/
File: radar.sch

**Title:**

| Size: A4 | Date: | **Rev:** |
|---|---|---|
| KiCad E.D.A. kicad 7.0.6 | | Id: 2/8 |

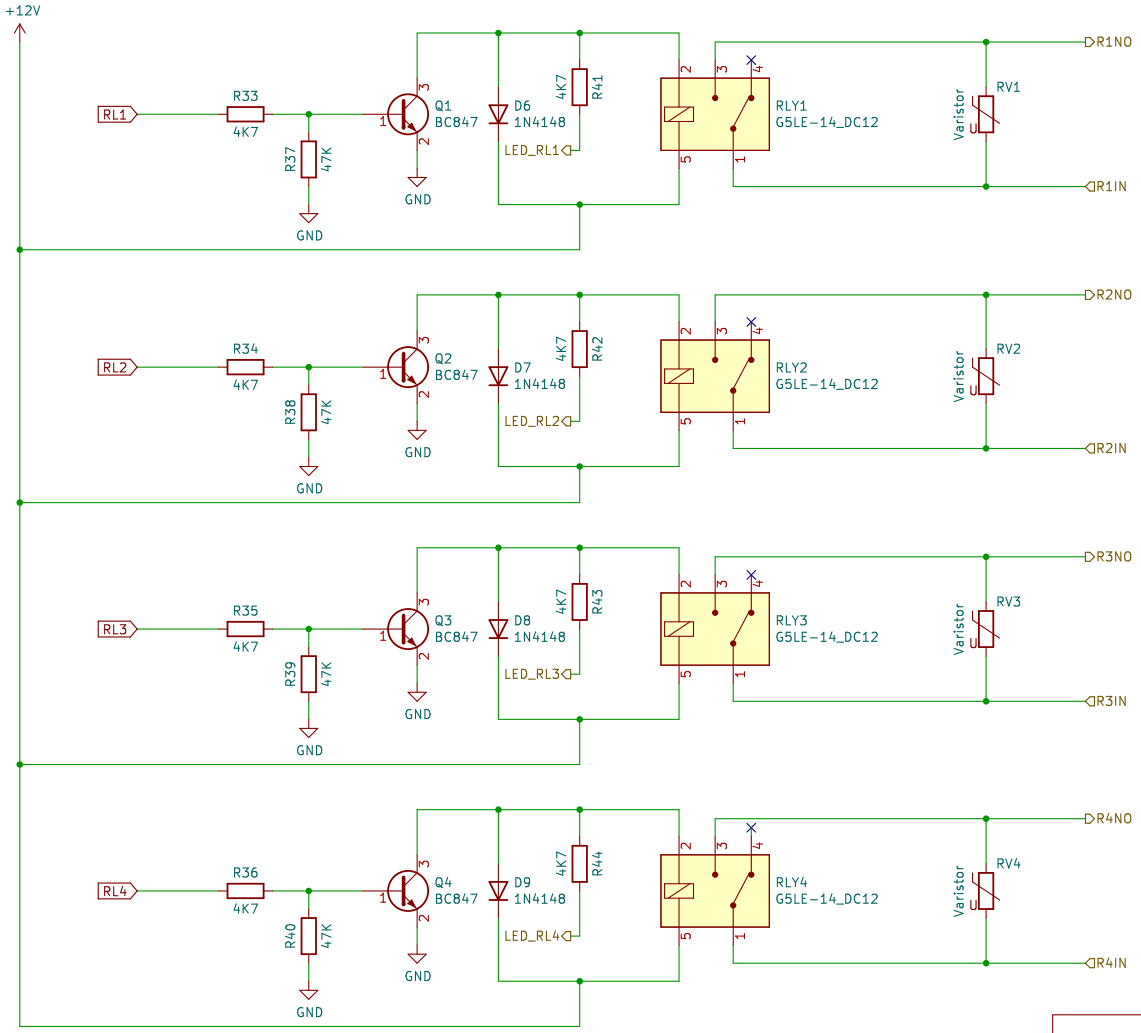


Kursad Karslioglu
kursad@akim.com.tr
**AKIM Elektronik LTD. STI.**

Sheet: /Realy/
File: relay.sch

**Title: KANAL KAPAK**

| | | |
|---|---|---|
| Size: A4 | Date: 2021-03-24 | **Rev: 1.0** |
| KiCad E.D.A. kicad 7.0.6 | | Id: 3/8 |

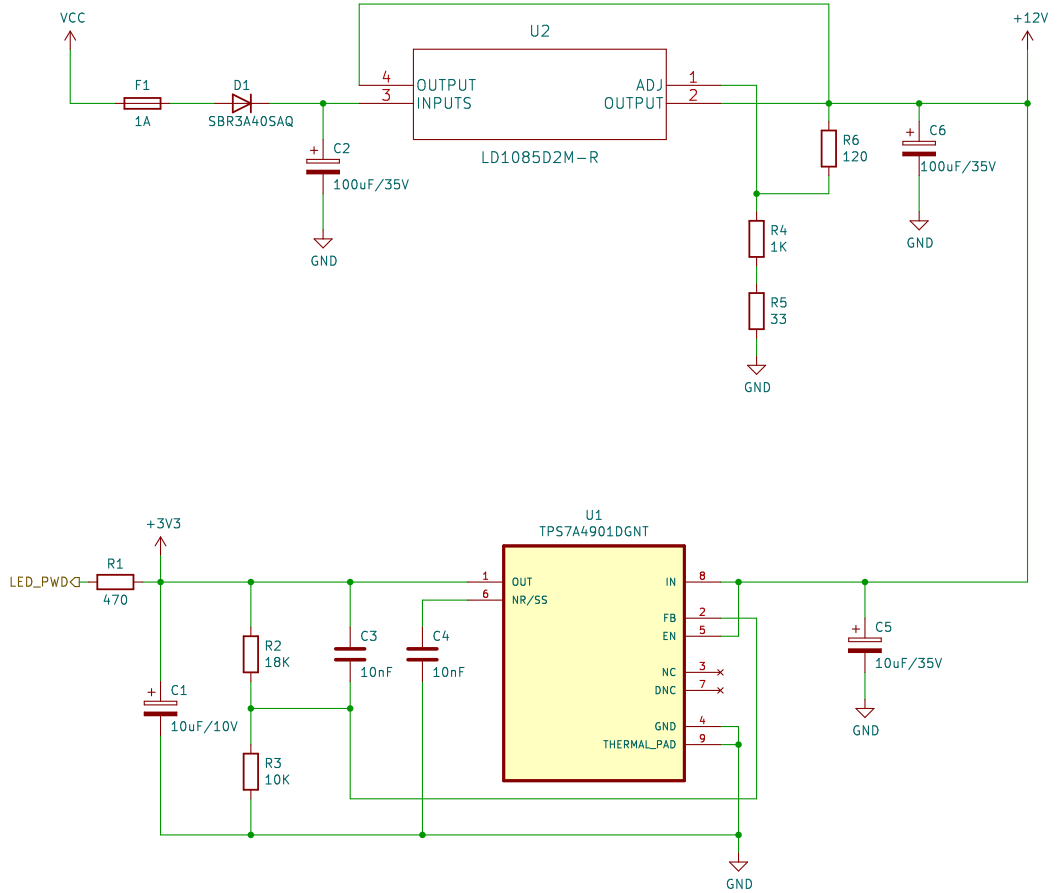


Kursad Karslioglu
kursad@akim.com.tr
**AKIM Elektronik LTD. STI.**

Sheet: /Power/
File: power.sch

***Title: KANAL KAPAK***

| | | |
|---|---|---|
| Size: A4 | Date: 2021-03-24 | **Rev: 1.0** |
| KiCad E.D.A. kicad 7.0.6 | | Id: 4/8 |

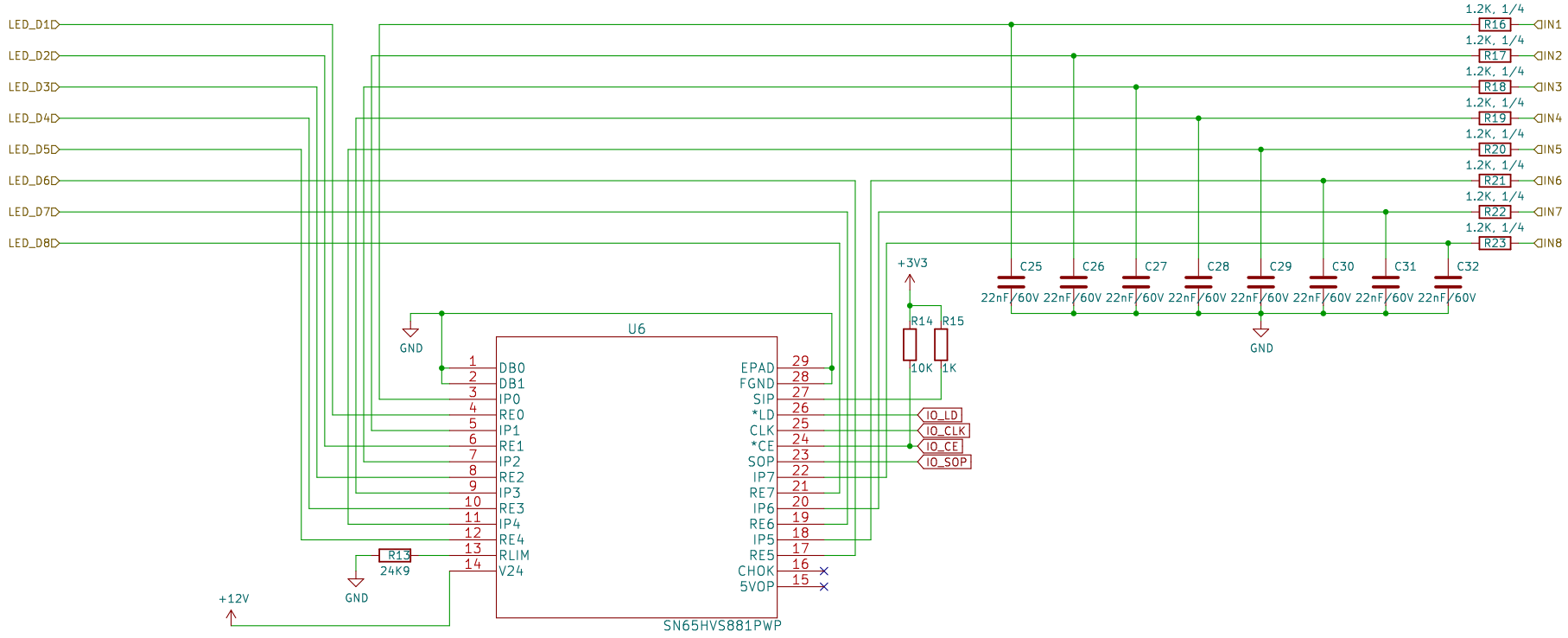


Kursad Karslioglu
kursad@akim.com.tr
**AKIM Elektronik LTD. STI.**

Sheet: /SN65HVS881_PWP_28/
File: SN65HVS881.sch

***Title: KANAL KAPAK***

| | | |
|---|---|---|
| Size: A4 | Date: 2021-03-24 | **Rev: 1.0** |
| KiCad E.D.A. kicad 7.0.6 | | Id: 5/8 |

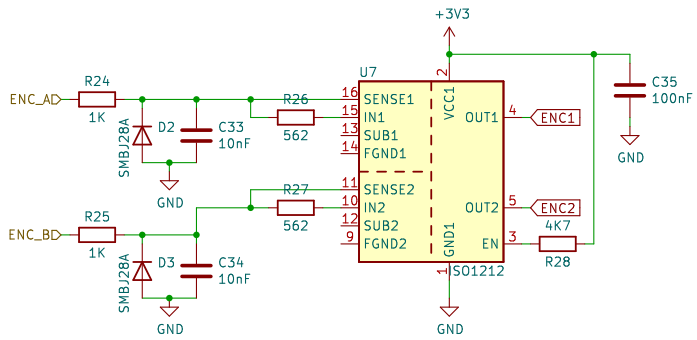


Sheet: /Encoder/
File: encoder.sch

**Title:**

| Size: A4 | Date: | Rev: |
|---|---|---|
| KiCad E.D.A. kicad 7.0.6 | | Id: 6/8 |

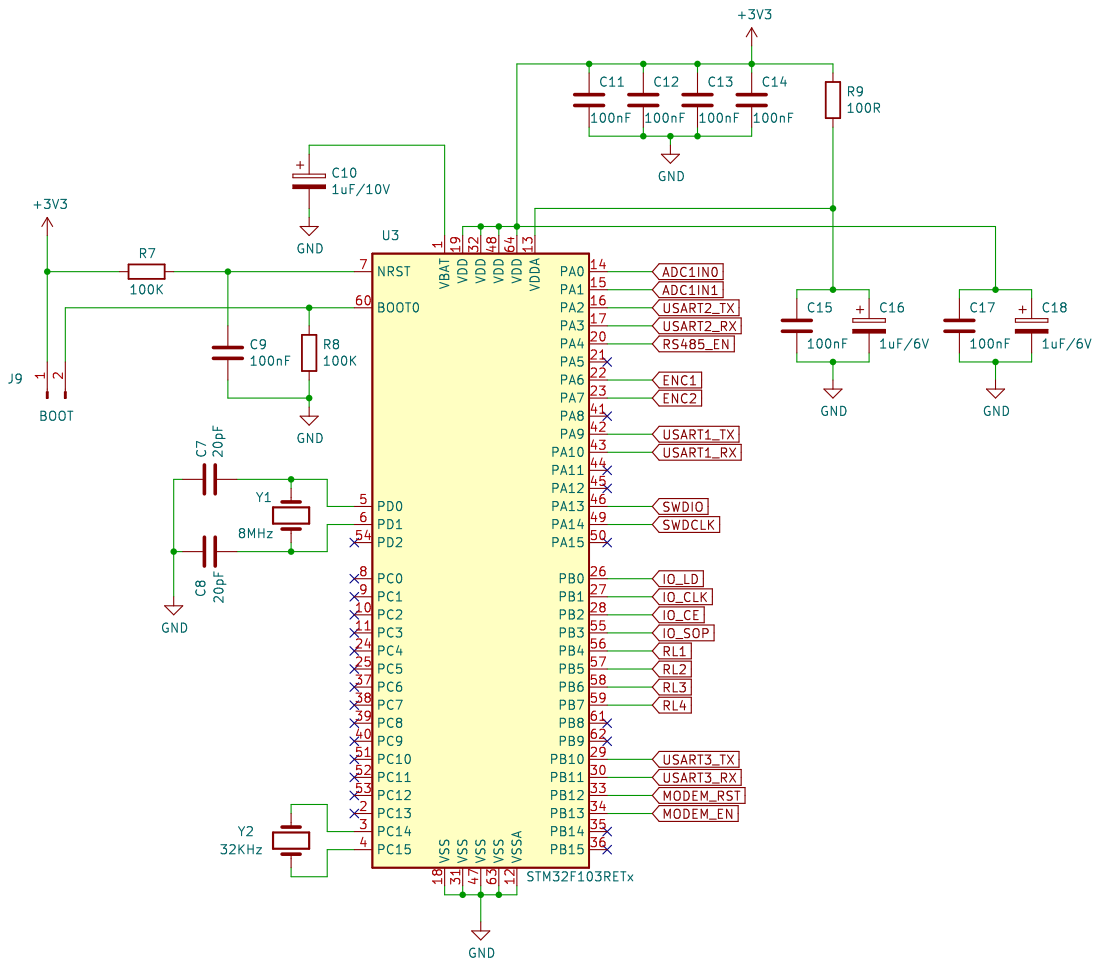


Kursad Karslioglu
kursad@akim.com.tr
**AKIM Elektronik LTD. STI.**

Sheet: /MCU/
File: mcu.sch

**Title: KANAL KAPAK**

| | | |
|---|---|---|
| Size: A4 | Date: 2021-03-24 | **Rev: 1.0** |
| KiCad E.D.A. kicad 7.0.6 | | Id: 7/8 |

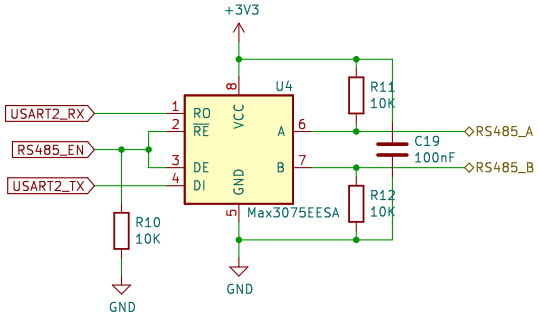


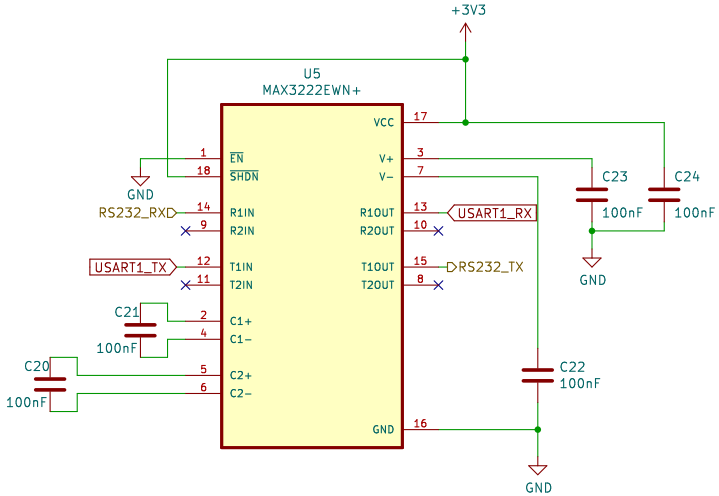


Kursad Karslioglu
kursad@akim.com.tr
**AKIM Elektronik LTD. STI.**

Sheet: /RS232/RS485/
File: rs232-rs485.sch

**Title: KANAL KAPAK**

| | | |
|---|---|---|
| Size: A4 | Date: 2021-03-24 | **Rev: 1.0** |
| KiCad E.D.A. kicad 7.0.6 | | Id: 8/8 |